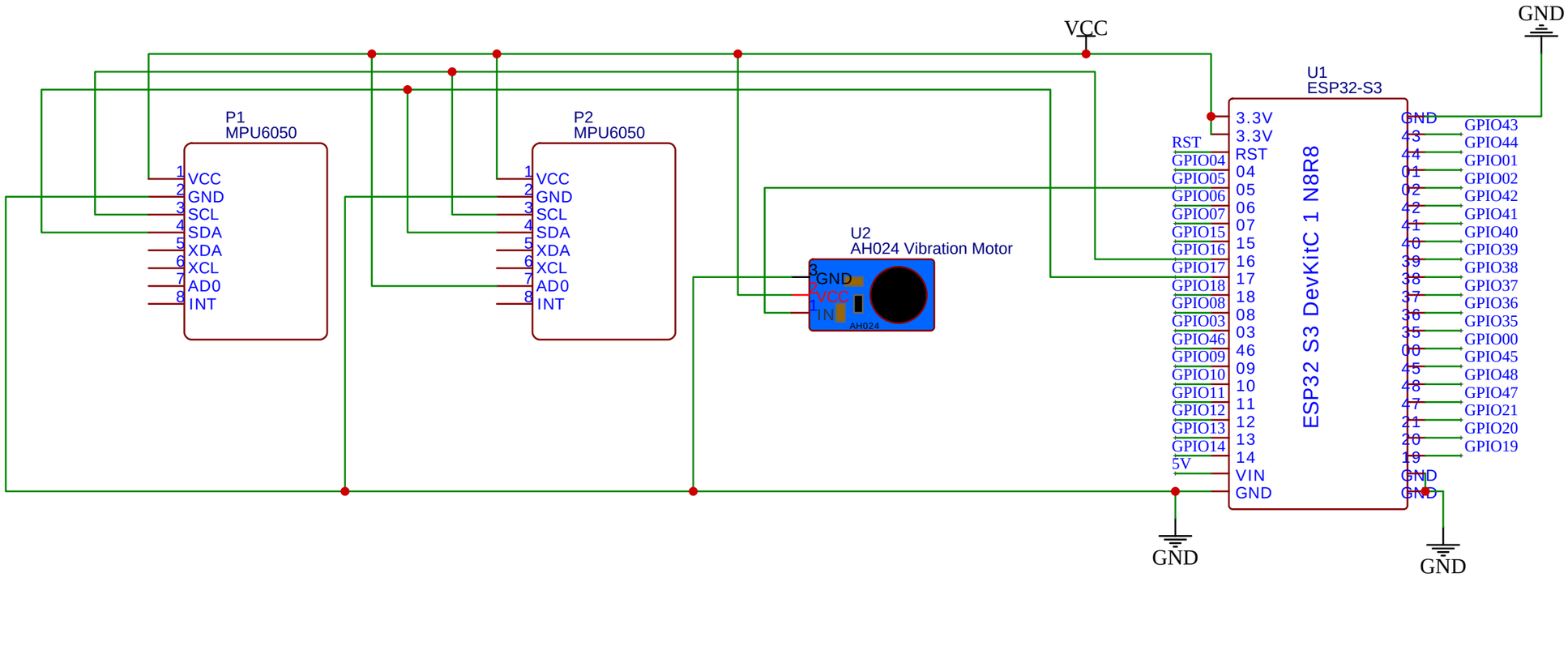

TITLE: BOARD1_GRYO&VIBRATIONMOTOR		REV: 1.0
EasyEDA	Company: ANDREW'S FLEX	Sheet: 1/2
	Date: 2026-3-12 Drawn By: ANDREW	